OUTLINE DIMENSIONAL DRAWING

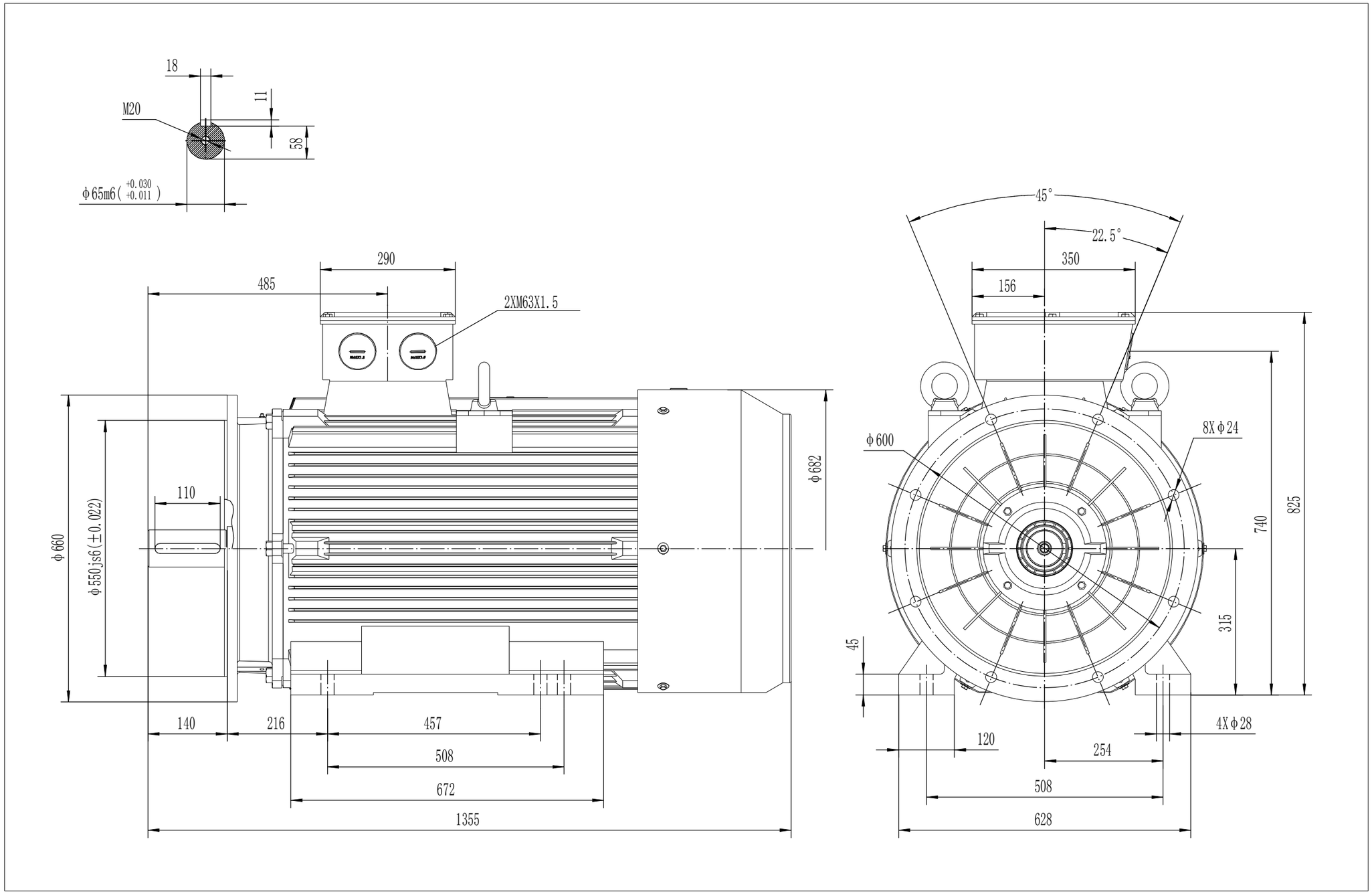

TECHTOP AUSTRALIA

TECHTOP AUSTRALIA PTY LTD	
FRAME	TCI 315M-L-2 B35
DATE 2012/05/10	DRAWING NO. 1HMY.010.T113B